DETAILED DIMENSIONS

PHONIX FLAT + EXT BRC.PHN.F (OPTIONAL)

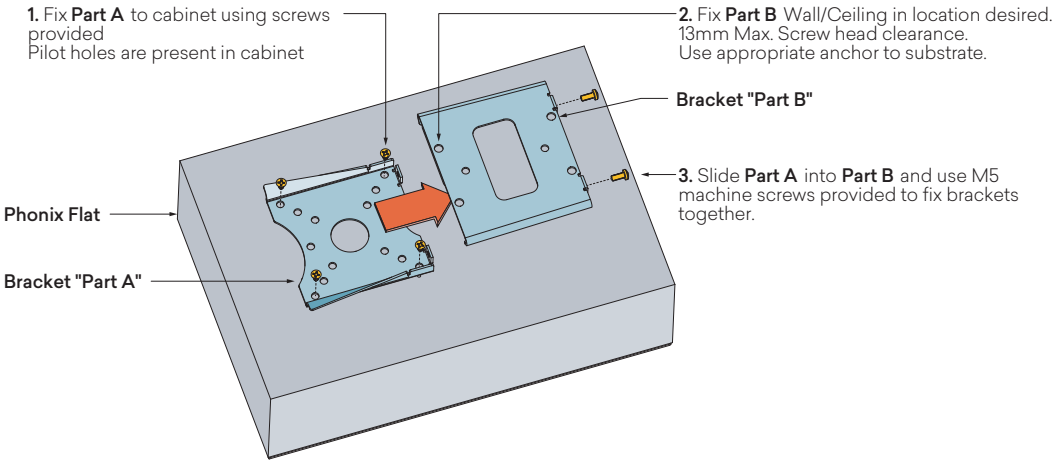

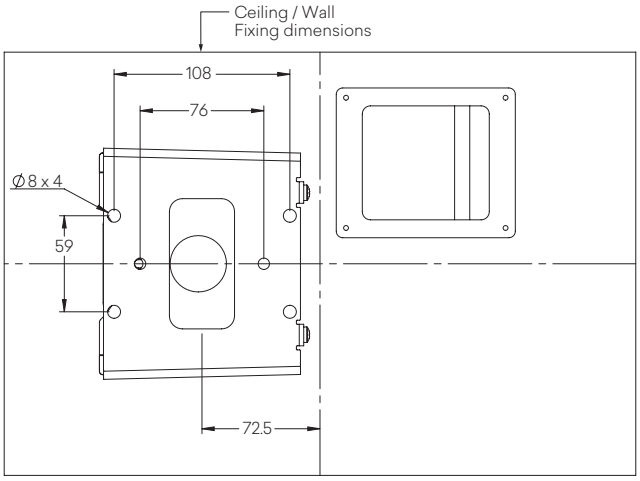

Rear View

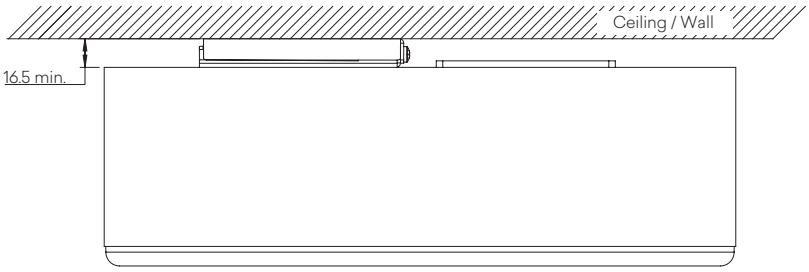

Side View